LM27952 White LED Adaptive 1.5X/1X Switched Capacitor Current Driver

Check for Samples: LM27952

FEATURES

- **Drives up to 4 LEDs with up to 30mA each**
- **Regulated current sources with 0.2%(typ.) matching**
- **3/2x, 1x Gain transition based on LED V_F**
- **Peak Efficiency Over 85%**
- **Input Voltage Range: 3.0V to 5.5V**
- **PWM Brightness Control**
- **Very Small Solution Size - NO INDUCTOR**
- **Fixed 750kHz Switching Frequency**
- **<1µA Shutdown Current**
- **14-pin WSON Package: 4.0mm X 3.0mm X 0.8mm**

APPLICATIONS

- **White LED Display Backlights**
- **White LED Keypad Backlights**
- **General Purpose LED Lighting**

DESCRIPTION

The LM27952 is a switched capacitor white-LED driver capable of driving up to 4 LEDs with 30mA through each LED. Its 4 tightly regulated current sinks ensure excellent LED current and brightness matching. LED drive current is programmed by an external sense resistor. The LM27952 operates over an input voltage range from 3.0V to 5.5V and requires only four low-cost ceramic capacitors.

The LM27952 provides excellent efficiency without the use of an inductor by operating the charge pump in a gain of 3/2, or in a gain of 1. Maximum efficiency is achieved over the input voltage range by actively selecting the proper gain based on the LED forward voltage requirements.

Typical Application Circuit

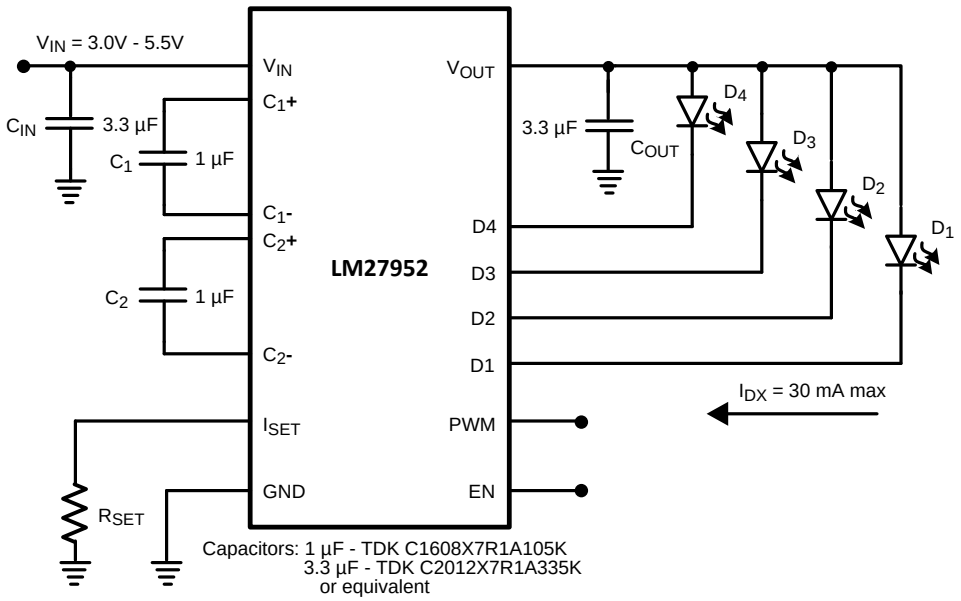

Please be aware that an important notice concerning availability, standard warranty, and use in critical applications of Texas Instruments semiconductor products and disclaimers thereto appears at the end of this data sheet.

All trademarks are the property of their respective owners.

PRODUCTION DATA information is current as of publication date. Products conform to specifications per the terms of the Texas Instruments standard warranty. Production processing does not necessarily include testing of all parameters.

Copyright © 2005–2013, Texas Instruments Incorporated

DESCRIPTION (CONTINUED)

The LM27952 uses constant frequency pre-regulation to minimize conducted noise on the input. It has a fixed 750kHz switching frequency optimized for portable applications. The LM27952 consumes less than 1µA of supply current when shut down.

The LM27952 is available in a 14-pin No-Pullback Leadless Leadframe Package: WSON-14.

CONNECTION DIAGRAM

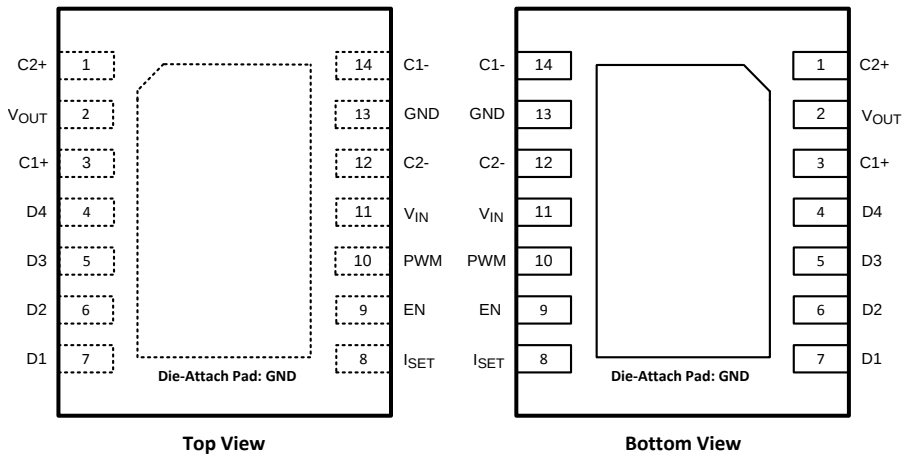

Figure 1. LM27952
14-pin No-Pullback Leadless Leadframe Package (WSON-14)
4mm x 3mm x 0.8mm
See Package Number NHK0014A

Pin Description

Pin	Name	Description
1	C2+	Flying Capacitor C2 Connection
2	V_{OUT}	Pre-Regulated Charge Pump Output
3	C1+	Flying Capacitor C1 Connection
4	D4	Regulated Current Sink Input.
5	D3	Regulated Current Sink Input.
6	D2	Regulated Current Sink Input.
7	D1	Regulated Current Sink Input.
8	I_{SET}	Current Set Input. Placing a resistor (R_{SET}) between this pin and GND sets the LED current for all the LEDs. LED Current = 200 x (1.25V ÷ R_{SET}).
9	EN	Enable Logic Input Pin. Logic Low = Shut Down, Logic High = Enabled. There is a 150kΩ (typ.) resistor connected internally between the EN pin and GND.
10	PWM	Current Sink Modulation Logic Input Pin. Logic Low = Off, Logic High = On. Applying a Pulse Width Modulated (PWM) signal to this pin allows the regulated current sinks to be modulated without shutting down the internal Charge Pump and the V_{OUT} node.
11	V_{IN}	Input Supply Range: 3.0V to 5.5V.
12	C2-	Flying Capacitor C2 Connection.
13	GND	Power Supply Ground Connection.
14	C1-	Flying Capacitor C1 Connection.

These devices have limited built-in ESD protection. The leads should be shorted together or the device placed in conductive foam during storage or handling to prevent electrostatic damage to the MOS gates.

Copyright © 2005–2013, Texas Instruments Incorporated

Absolute Maximum Ratings (1) (2) (3)

V_{IN}	-0.3V to 6.0V
EN, PWM	-0.3V to (V_{IN} + 0.3V) w/ 6.0V max
Continuous Power Dissipation (4)	Internally Limited
Junction Temperature ($T_{J-MAX-ABS}$)	150°C
Storage Temperature Range	-65°C to 150°C
Lead Temp. (Soldering, 5 sec.)	260°C
ESD Rating (5) Human Body Model	2kV

(1) Absolute Maximum Ratings indicate limits beyond which damage to the component may occur. Operating Ratings are conditions under which operation of the device is ensured. Operating Ratings do not imply ensured performance limits. For specified performance limits and associated test conditions, see the Electrical Characteristics tables.
(2) All voltages are with respect to the potential at the GND pin.
(3) **If Military/Aerospace specified devices are required, please contact the Texas Instruments Sales Office / Distributors for availability and specifications.**
(4) Internal thermal shutdown circuitry protects the device from permanent damage. Thermal shutdown engages at T_J=150°C (typ.) and disengages at T_J = 140°C (typ.).
(5) The Human-body model is a 100 pF capacitor discharged through a 1.5kΩ resistor into each pin.

Operating Ratings (1) (2)

Input Voltage V_{IN}	3.0V to 5.5V
LED Voltage Range	2.5V to 3.9V
Junction Temperature Range (T_J)	-40°C to +115°C
Ambient Temperature Range (T_A) (3)	-40°C to +85 °C

(1) All voltages are with respect to the potential at the GND pin.
(2) Min and Max limits are ensured by design, test, or statistical analysis. Typical numbers are not ensured, but do represent the most likely norm.
(3) In applications where high power dissipation and/or poor package thermal resistance is present, the maximum ambient temperature may have to be derated. Maximum ambient temperature (T_{A-MAX}) is dependent on the maximum operation junction temperature ($T_{J-MAX-OP}$ = 115ºC), the maximum power dissipation of the device in the application (P_{D-MAX}), and the junction-to ambient thermal resistance of the part/package in the application (θ_{JA}), as given by the following equation: $T_{A-MAX} = T_{J-MAX-OP} - (\theta_{JA} \times P_{D-MAX})$.

Thermal Characteristics

Junction-to-Ambient Thermal Resistance, WSON-14 Package (θ_{JA}) (1)	45°C/W

(1) Junction-to-ambient thermal resistance (θ_{JA}) is taken from a thermal modeling result, performed under the conditions and guidelines set forth in the JEDEC standard JESD51-7. The test board is a 4 layer FR-4 board measuring 102mm x 76mm x 1.6mm with a 2 x 1 array of thermal vias. The ground plane on the board is 50mm x 50mm. Thickness of copper layers are 36µm/18µm /18µm/36µm(1.5oz/1oz/1oz/1.5oz). Ambient temperature in simulation is 22°C, still air. Power dissipation is 1W. The value of θ_{JA} of the LM27952 in WSON-14 could fall in a range as wide as 45ºC/W to 150ºC/W (if not wider), depending on PWB material, layout, and environmental conditions. In applications where high maximum power dissipation exists (high V_{IN}, high I_{OUT}), special care must be paid to thermal dissipation issues. For more information on these topics, please refer to Application Note 1187: Leadless Leadframe Package (LLP) and the **Power Efficiency and Power Dissipation** section of this datasheet..

Copyright © 2005–2013, Texas Instruments Incorporated

Electrical Characteristics (1) (2)

Limits in standard typeface are for T_A = 25°C, and limits in **boldface** type apply over the full operating junction temperature range (-40°C to +85 °C). Unless otherwise noted, specifications apply to the LM27952 Typical Application Circuit (pg.1) with V_{IN} = 3.6V, V(EN) = 1.8V, V(PWM) = 1.8V, 4 LEDs, V_{DX} = 0.45V, C_{IN} = C_{OUT} = 3.3µF, C_1 = C_2 = 1µF, R_{SET} = 12.5kΩ (3)

Symbol	Parameter	Conditions	Min	Typ	Max	Units
I_{DX}	LED Current Regulation	3.0V ≤ V_{IN} ≤ 5.5V R_{SET} = 12.5kΩ I_{VOUT} = 0mA	19.32 **(−8%)**	21	22.68 **(+8%)**	mA
		3.0V ≤ V_{IN} ≤ 5.5V R_{SET} = 8.32kΩ I_{VOUT} = 0mA		31		
		3.0V ≤ V_{IN} ≤ 5.5V R_{SET} = 24.9kΩ I_{VOUT} = 0mA		11		
$I_{D\text{-}MATCH}$	LED Current Matching (4)	R_{SET} = 8.32kΩ		0.2	**1**	%
I_Q	Quiescent Supply Current	$D_{(1\text{-}4)}$ = OPEN R_{SET} = OPEN		1.3	**1.7**	mA
I_{SD}	Shutdown Supply Current	3.0V ≤ V_{IN} ≤ 5.5V V(EN) = 0V		0.1	**1**	µA
V_{SET}	I_{SET} Pin Voltage	3.0V ≤ V_{IN} ≤ 5.5V		1.25		V
I_{DX} / I_{SET}	Output Current to Current Set Ratio			200		
V_{HR}	Current Sink Voltage Headroom Requirement (5)	I_{DX} = 95% I_{DX} (nom.) R_{SET} = 8.32kΩ (I_{DX} nom. = 31mA)		360		mV
		I_{DX} = 95% I_{DX} (nom.) R_{SET} = 12.5kΩ (I_{DX} nom. = 21mA)		240		
f_{SW}	Switching Frequency		**525** **(-30%)**	750	**975** **(+30%)**	kHz
V_{IH}	Logic Input High	Input Pins: EN, PWM 3.0V ≤ V_{IN} ≤ 5.5V	**1.0**		**V_{IN}**	V
V_{IL}	Logic Input Low	Input Pins: EN, PWM 3.0V ≤ V_{IN} ≤ 5.5V	**0**		**0.4**	
I_{IH}	Logic Input High Current	Input Pin: PWM V(PWM) = 1.8V		10		nA
		Input Pin: EN V(EN) = 1.8V (6)		12		µA
I_{IL}	Logic Input Low Current	Input Pins: EN, PWM V(EN, PWM) = 0V		10		nA
R_{OUT}	Charge Pump Output Resistance (7)			3.3		Ω
V_{GDX}	1x to 3/2x Gain Transition Voltage Threshold on V_{DX}	V_{DX} Falling		450		mV
t_{ON}	Startup Time	I_{DX} = 90% steady state		330		µs

(1) All voltages are with respect to the potential at the GND pin.
(2) Min and Max limits are ensured by design, test, or statistical analysis. Typical numbers are not ensured, but do represent the most likely norm.
(3) C_{IN}, C_{OUT}, C_1, C_2: Low-ESR Surface-Mount Ceramic Capacitors (MLCCs) used in setting electrical characteristics
(4) LED Current Matching is based on two calculations: [(I_{MAX} - I_{AVG}) ÷ I_{AVG}] and [(I_{AVG} - I_{MIN}) ÷ I_{AVG}]. I_{MAX} and I_{MIN} are the highest and lowest respective Dx currents, and I_{AVG} is the average Dx current of all four current sinks. The largest number of the two calculations (worst case) is considered the matching figure for the part. The typical specification provided is the most likely norm of the matching figure for all parts.
(5) Headroom Voltage = V_{DX} to GND. If headroom voltage requirement is not met, LED current regulation will be compromised.
(6) EN Logic Input High Current (I_{IH}) is due to a 150kΩ (typ.) pull-down resistor connected internally between the EN and GND pins.
(7) The open loop output resistance (R_{OUT}) models all voltage losses in the charge pump. R_{OUT} can be used to estimate the voltage at the charge pump output V_{OUT} and the maximum current capability of the device under low V_{IN} and high I_{OUT} conditions, beyond what is specified in the electrical specifications table: V_{OUT} = (G x V_{IN}) - (R_{OUT} x I_{OUT}). In the equation, G is the charge pump gain mode, and I_{OUT} is the total output current (sum of all active Dx current sinks and all current drawn from V_{OUT}).

Copyright © 2005–2013, Texas Instruments Incorporated

BLOCK DIAGRAM

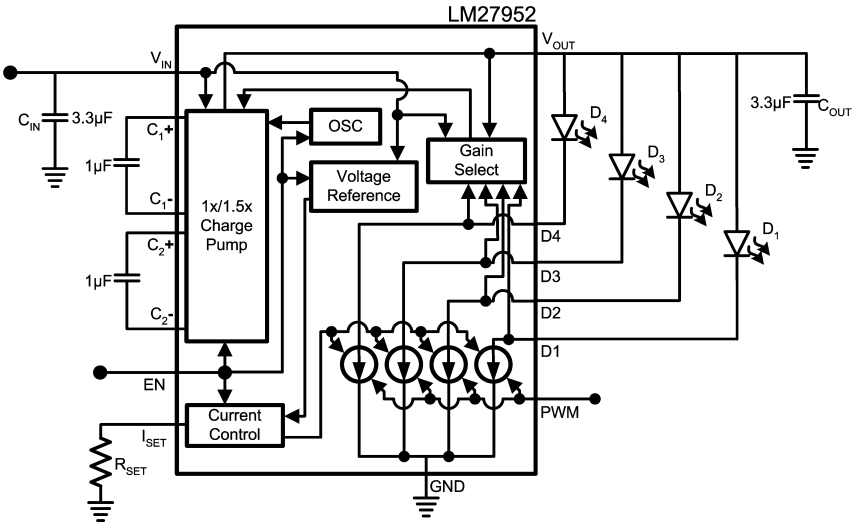

Typical Performance Characteristics

Unless otherwise specified: T_A = 25°C, 4 LEDs, V_{DX} = 0.45V, V_{IN} = 3.6V, V_{EN} = V_{IN}, V_{PWM} = V_{IN}, C_1 = C_2 = 1µF, C_{IN} = C_{OUT} = 3.3µF. Capacitors are low-ESR multi-layer ceramic capacitors (MLCC's).

LED Current Regulation vs. Input Voltage

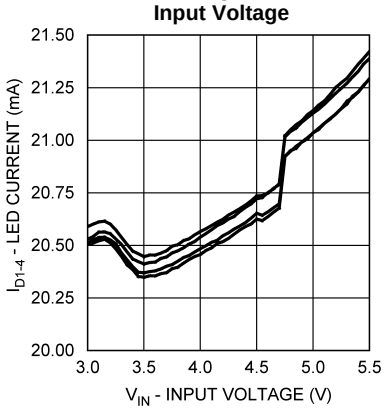

Figure 2.

LED Current Regulation vs. Input Voltage

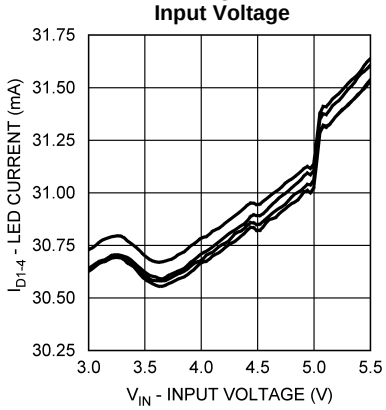

Figure 3.

Average LED Current Regulation vs. Input Voltage

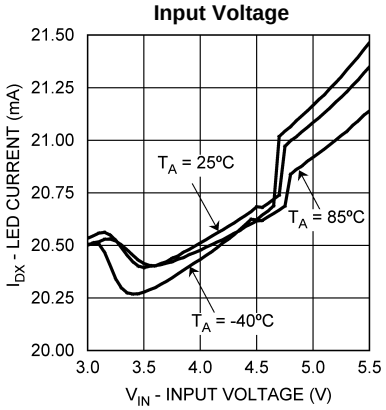

Figure 4.

Average LED Current Regulation vs. Input Voltage

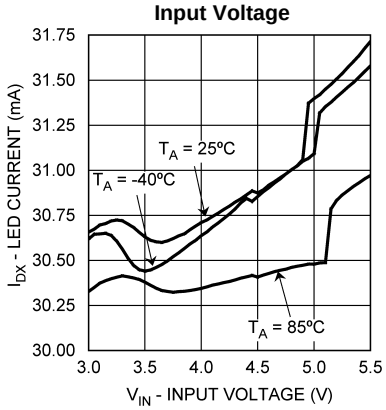

Figure 5.

Efficiency vs. Input Voltage

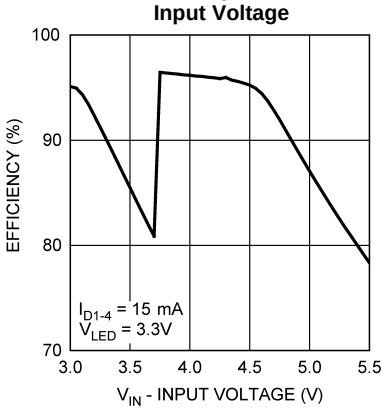

Figure 6.

LED Current vs. R_{SET}

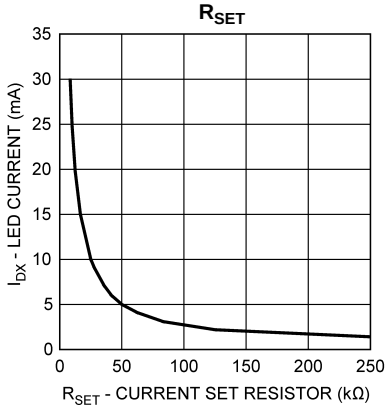

Figure 7.

Copyright © 2005–2013, Texas Instruments Incorporated

Typical Performance Characteristics (continued)

Unless otherwise specified: T_A = 25°C, 4 LEDs, V_{DX} = 0.45V, V_{IN} = 3.6V, V_{EN} = V_{IN}, V_{PWM} = V_{IN}, C_1 = C_2 = 1µF, C_{IN} = C_{OUT} = 3.3µF. Capacitors are low-ESR multi-layer ceramic capacitors (MLCC's).

LED Current vs. V_{HR}

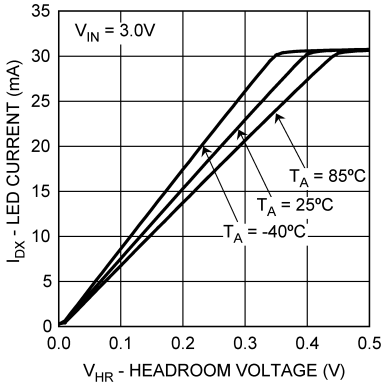

Figure 8.

Output Voltage vs. Output Current

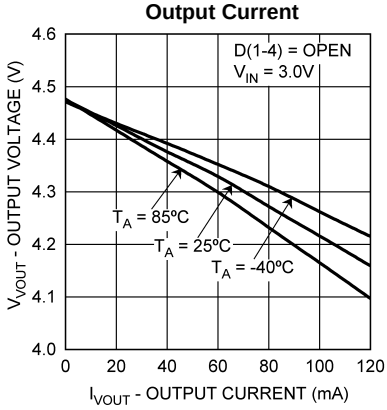

Figure 9.

Input and Output Voltage Ripple

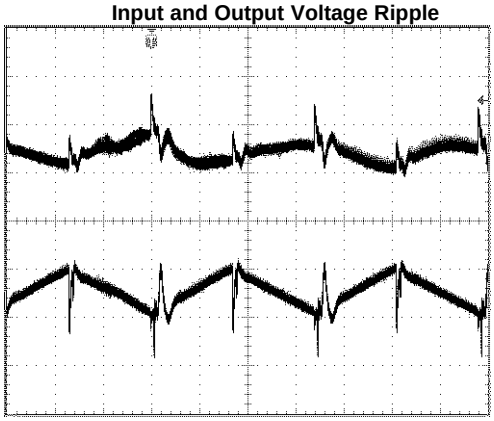

V_{IN} = 3.6V, Load = 15mA/LED, 4 LEDs
CH1 (TOP): V_{IN}; Scale: 20mV/Div, AC Coupled
CH2 (BOTTOM): V_{OUT}; Scale: 20mV/Div, AC Coupled
Time scale: 400ns/Div

Figure 10.

Startup Response

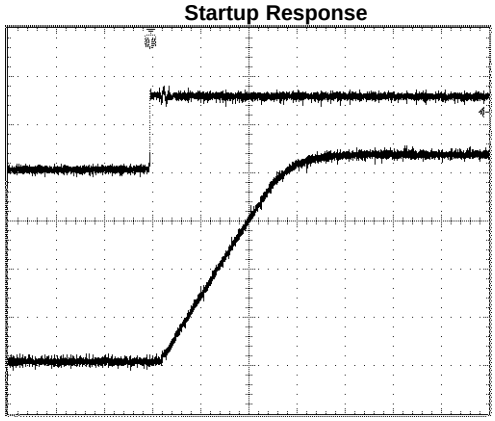

V_{IN} = 3.6V, Load = 20mA/LED, 4 LEDs
CH1 (TOP): V_{EN}; Scale: 1V/Div
CH2 (BOTTOM): V_{OUT}; Scale: 1V/Div
Time scale: 100µs/Div

Figure 11.

Copyright © 2005–2013, Texas Instruments Incorporated

APPLICATION INFORMATION

CIRCUIT DESCRIPTION

The LM27952 is an adaptive 1.5x/1x CMOS charge pump, optimized for driving white LEDs used in backlighting small-format displays. It provides four constant current inputs capable of sinking up to 30mA through each LED. The well-matched current sinks ensure the current through all the LEDs are virtually identical, providing a uniform brightness across the entire display.

Each LED is driven from V_{OUT} and connected to one of the four current sinks. LED drive current is programmed by connecting a resistor, R_{SET}, to the current set pin, I_{SET}. LED brightness is adjusted by applying a Pulse Width Modulated (PWM) signal to the dedicated PWM input pin.

CHARGE PUMP

The input to the 1.5x/1x charge pump is connected to the V_{IN} pin, and the loosely regulated output of the charge pump is connected to the V_{OUT} pin. The recommended input voltage range of the LM27952 is 3.0V to 5.5V. The device's loosely-regulated charge pump has both open loop and closed loop modes of operation. When the device is in open loop, the voltage at V_{OUT} is equal to the gain times the voltage at the input. When the device is in closed loop, the voltage at V_{OUT} is loosely regulated to 4.5V (typ.). The charge pump gain transitions are actively selected to maintain regulation based on LED forward voltage and load requirements. This allows the charge pump to stay in the most efficient gain (1x) over as much of the input voltage range as possible, reducing the power consumed from the battery.

SOFT START

The LM27952 contains internal soft-start circuitry to limit input inrush currents when the part is enabled. Soft start is implemented internally with a controlled turn-on of the internal voltage reference. Due to the soft-start circuitry, startup time of the LM27952 is approximately 330µs (typ.).

ENABLE AND PWM PINS

The LM27952 has 2 logic control pins. Both pins are active-high logic (HIGH = ON). There is an internal pull-down resistor (150kΩ typ.) connected between the enable pin (EN) and GND. There is no pull-up or pull-down connected to the Pulse Width Modulated (PWM) pin.

The EN pin is the master enable pin for the part. When the voltage on this pin is low (<0.4V), the part is in shutdown mode. In this mode, all internal circuitry is OFF and the part consumes very little supply current (<1µA typ.). When the voltage on the EN pin is high (>1.0V), the part will activate the charge pump and regulate the output voltage to its nominal value.

The PWM pin serves as a dedicated logic input for LED brightness control. When the voltage on this pin is low (<0.4V), the current sinks will be turned off and no current will flow through the LEDs. When the voltage on this pin is high (>1.0V), the currents sinks will turn on and regulate to the current level set by the resistor connected to the I_{SET} pin.

SETTING LED CURRENTS

The current through the four LEDs connected to D_{1-4} can be set to a desired level simply by connecting an appropriately sized resistor (R_{SET}) between the I_{SET} pin of the LM27952 and GND. The LED currents are proportional to the current that flows out of the I_{SET} pin and are a factor of 200 times greater than the I_{SET} current. The feedback loop of an internal amplifier sets the voltage of the I_{SET} pin to 1.25V (typ.). The statements above are simplified in the equations below:

$$I_{Dx} = 200 \times (V_{SET} / R_{SET}) \quad (1)$$

$$R_{SET} = 200 \times (1.25V / I_{Dx}) \quad (2)$$

Copyright © 2005–2013, Texas Instruments Incorporated

ADJUSTING LED BRIGHTNESS (PWM control)

Perceived LED brightness can be adjusted using a PWM control signal on the LM27952 PWM logic input pin, turning the current sources ON and OFF at a rate faster than perceptible by the eye. When this is done, the total brightness perceived is proportional to the duty cycle (D) of the PWM signal (D = the percentage of time that the LED is on in every PWM cycle). A simple example: if the LEDs are driven at 15mA each with a PWM signal that has a 50% duty cycle, perceived LED brightness will be about half as bright as compared to when the LEDs are driven continuously with 15mA.

The minimum recommended PWM frequency is 100Hz. Frequencies below this may be visibly noticeable as flicker or blinking. The maximum recommended PWM frequency is 1kHz. Frequencies above this may cause interference with internal current driver circuitry and/or noise in the audible range. Due to the regulation control loop, the maximum frequency and minimum duty cycle applied to the PWM pin should be chosen such that the minimum ON time is no less than 30µs in duration. If a PWM signal is applied to the EN pin instead, the maximum frequency and minimum duty cycle should be chosen to accommodate both the LM27952 startup time (330µs typ.) and the 30µs control loop delay.

The preferred method to adjust brightness is to keep the master EN voltage ON continuously and apply a PWM signal to the dedicated PWM input pin. The benefit of this type of connection can be best understood with a contrary example. When a PWM signal is connected to the master enable (EN) pin, the charge pump repeatedly turns on and off. Every time the charge pump turns on, there is an inrush of current as the capacitances, both internal and external, are recharged. This inrush current results in a current spike and a voltage dip at the input of the part. By only applying the PWM signal to PWM logic input pin, the charge pump continuously stays on, resulting in much lower input noise.

In cases where a PWM signal must be connected to the EN pin, measures can be taken to reduce the magnitude of the charge-pump turn-on transient response. More input capacitance, series resistors and/or ferrite beads may provide benefits. If the current spikes and voltage dips can be tolerated, connecting the PWM signal to the EN pin does provide a benefit of lower supply current consumption. When the PWM signal to the EN pin is low, the LM27952 will be shutdown and input current will only be a few micro-amps. This results in a lower time-averaged input current than the prior suggestion, where EN is kept on continuously.

MAXIMUM OUTPUT CURRENT, MAXIMUM LED VOLTAGE, MINIMUM INPUT VOLTAGE

The LM27952 can drive 4 LEDs at 30mA each from an input voltage as low as 3.0V, so long as the LEDs have a forward voltage of 3.5V or less (room temperature).

The statement above is a simple example of the LED drive capabilities of the LM27952. The statement contains key application parameters required to validate an LED-drive design using the LM27952: LED current (I_{LED}), number of active LEDs (N), LED forward voltage (V_{LED}), and minimum input voltage ($V_{IN\text{-}MIN}$).

The equation below can be used to estimate the total output current capability of the LM27952:

$$I_{LED_MAX} = ((1.5 \times V_{IN}) - V_{LED}) / ((N \times R_{OUT}) + k_{HR}) \text{ (eq. 1)} \quad (3)$$

$$I_{LED_MAX} = ((1.5 \times V_{IN}) - V_{LED}) / ((N \times 3.3\Omega) + 12\text{mV/mA}) \quad (4)$$

R_{OUT} – Output resistance. This parameter models the internal losses of the charge pump that result in voltage droop at the pump output V_{OUT}. Since the magnitude of the voltage droop is proportional to the total output current of the charge pump, the loss parameter is modeled as a resistance. The output resistance of the LM27952 is typically 3.3Ω (V_{IN} = 3.0V, T_A = 25°C). In equation form:

$$V_{VOUT} = 1.5 \times V_{IN} – N \times I_{LED} \times R_{OUT} \quad \text{(eq. 2)} \quad (5)$$

k_{HR} – Headroom constant. This parameter models the minimum voltage required across the current sinks for proper regulation. This minimum voltage is proportional to the programmed LED current, so the constant has units of mV/mA. The typical k_{HR} of the LM27952 is 12mV/mA. In equation form:

$$(V_{VOUT} – V_{LED}) > k_{HR} \times I_{LED} \quad \text{(eq. 3)} \quad (6)$$

The "$I_{LED\text{-}MAX}$" equation (eq. 1) is obtained from combining the R_{OUT} equation (eq. 2) with the k_{HR} equation (eq. 3) and solving for I_{LED}. Maximum LED current is highly dependent on minimum input voltage and LED forward voltage. Output current capability can be increased by raising the minimum input voltage of the application, or by selecting LEDs with a lower forward voltage. Excessive power dissipation may also limit output current capability of an application.

Copyright © 2005–2013, Texas Instruments Incorporated

CAPACITOR SELECTION

The LM27952 requires 4 external capacitors for proper operation. Surface-mount multi-layer ceramic capacitors are recommended. These capacitors are small, inexpensive and have very low equivalent series resistance (ESR <20mΩ typ.). Tantalum capacitors, OS-CON capacitors, and aluminum electrolytic capacitors are not recommended for use with the LM27952 due to their high ESR, as compared to ceramic capacitors.

For most applications, ceramic capacitors with X7R or X5R temperature characteristic are preferred for use with the LM27952. These capacitors have tight capacitance tolerance (as good as ±10%) and hold their value over temperature (X7R: ±15% over -55°C to 125°C; X5R: ±15% over -55°C to 85°C).

Capacitors with Y5V or Z5U temperature characteristic are generally not recommended for use with the LM27952. Capacitors with these temperature characteristics typically have wide capacitance tolerance (+80%, -20%) and vary significantly over temperature (Y5V: +22%, -82% over -30°C to +85°C range; Z5U: +22%, -56% over +10°C to +85°C range). Under some conditions, a nominal 1µF Y5V or Z5U capacitor could have a capacitance of only 0.1µF. Such detrimental deviation is likely to cause Y5V and Z5U capacitors to fail to meet the minimum capacitance requirements of the LM27952.

The voltage rating of the output capacitor should be 10V or more. All other capacitors should have a voltage rating at or above the maximum input voltage of the application.

PARALLEL DX OUTPUTS FOR INCREASED CURRENT DRIVE

Outputs D_{1-4} may be connected together to drive a one or two LEDs at higher currents. In such a configuration, all four parallel current sinks of equal value drive the single LED. The LED current programmed should be chosen so that the current through each of the outputs is programmed to 25% of the total desired LED current. For example, if 60mA is the desired drive current for the single LED, R_{SET} should be selected such that the current through each of the current sink inputs is 15mA. Similarly, if two LEDs are to be driven by pairing up the D_{1-4} inputs (i.e D_{1-2}, D_{3-4}), R_{SET} should be selected such that the current through each current sink input is 50% of the desired LED current.

Connecting the outputs in parallel does not affect internal operation of the LM27952 and has no impact on the Electrical Characteristics and limits previously presented. The available diode output current, maximum diode voltage, and all other specifications provided in the Electrical Characteristics table apply to this parallel output configuration, just as they do to the standard 4-LED application circuit.

POWER EFFICIENCY

Efficiency of LED drivers is commonly taken to be the ratio of power consumed by the LEDs (PLED) to the power drawn at the input of the part (PIN). With a 1.5x/1x charge pump, the input current is equal to the charge pump gain times the output current (total LED current). For a simple approximation, the current consumed by internal circuitry can be neglected and the efficiency of the LM27952 can be predicted as follows:

$$P_{LED} = N \times V_{LED} \times I_{LED} \quad (7)$$

$$P_{IN} = V_{IN} \times I_{IN} \quad (8)$$

$$P_{IN} = V_{IN} \times (Gain \times N \times I_{LED} + I_Q) \quad (9)$$

$$E = (P_{LED} \div P_{IN}) \quad (10)$$

Neglecting I_Q will result in a slightly higher efficiency prediction, but this impact will be no more than a few percentage points when several LEDs are driven at full power. It is also worth noting that efficiency as defined here is in part dependent on LED voltage. Variation in LED voltage does not affect power consumed by the circuit and typically does not relate to the brightness of the LED. For an advanced analysis, it is recommended that power consumed by the circuit (V_{IN} x I_{IN}) be evaluated rather than power efficiency.

THERMAL PROTECTION

Internal thermal protection circuitry disables the LM27952 when the junction temperature exceeds 150°C (typ.). This feature protects the device from being damaged by high die temperatures that might otherwise result from excessive power dissipation. The device will recover and operate normally when the junction temperature falls below 140°C (typ.). It is important that the board layout provide good thermal conduction to keep the junction temperature within the specified operating ratings.

 Copyright © 2005–2013, Texas Instruments Incorporated

POWER DISSIPATION

The power dissipation ($P_{DISSIPATION}$) and junction temperature (T_J) can be approximated with the equations below. P_{IN} is the power generated by the 1.5x/1x charge pump, P_{LED} is the power consumed by the LEDs, $T_A$is the ambient temperature, and θ_{JA} is the junction-to-ambient thermal resistance for the WSON-14 package. V_{IN} is the input voltage to the LM27952, V_{LED} is the nominal LED forward voltage, and I_{LED} is the programmed LED current.

$$P_{DISSIPATION} = P_{IN} - P_{LED} \quad (11)$$

$$= [Gain \times V_{IN} \times (4 \times I_{LED})] - (V_{LED} \times 4 \times I_{LED}) \quad (12)$$

$$T_J = T_A + (P_{DISSIPATION} \times \theta_{JA}) \quad (13)$$

The junction temperature rating takes precedence over the ambient temperature rating. The LM27952 may be operated outside the ambient temperature rating, so long as the junction temperature of the device does not exceed the maximum operating rating of 115°C. The maximum ambient temperature rating must be derated in applications where high power dissipation and/or poor thermal resistance causes the junction temperature to exceed 115°C.

PCB Layout Considerations

The WSON is a leadframe based Chip Scale Package (CSP) with very good thermal properties. This package has an exposed DAP (die attach pad) at the center of the package measuring 3.0mm x 1.6mm. The main advantage of this exposed DAP is to offer lower thermal resistance when it is soldered to the thermal land on the PCB. For PCB layout, TI highly recommends a 1:1 ratio between the package and the PCB thermal land. To further enhance thermal conductivity, the PCB thermal land may include vias to a ground plane. For more detailed instructions on mounting WSON packages, please refer to Texas Instruments Application Note AN-1187.

Copyright © 2005–2013, Texas Instruments Incorporated

REVISION HISTORY

Changes from Revision A (May 2013) to Revision B	Page
• Changed layout of National Data Sheet to TI format	11

Copyright © 2005–2013, Texas Instruments Incorporated

PACKAGING INFORMATION

Orderable Device	Status (1)	Package Type	Package Drawing	Pins	Package Qty	Eco Plan (2)	Lead/Ball Finish	MSL Peak Temp (3)	Op Temp (°C)	Device Marking (4/5)	Samples
LM27952SD	ACTIVE	WSON	NHK	14		TBD	Call TI	Call TI	-40 to 85	D005B	Samples
LM27952SD/NOPB	ACTIVE	WSON	NHK	14	1000	Green (RoHS & no Sb/Br)	CU SN	Level-1-260C-UNLIM	-40 to 85	D005B	Samples
LM27952SDX	ACTIVE	WSON	NHK	14		TBD	Call TI	Call TI	-40 to 85	D005B	Samples
LM27952SDX/NOPB	ACTIVE	WSON	NHK	14	4500	Green (RoHS & no Sb/Br)	CU SN	Level-1-260C-UNLIM	-40 to 85	D005B	Samples

(1) The marketing status values are defined as follows:
ACTIVE: Product device recommended for new designs.
LIFEBUY: TI has announced that the device will be discontinued, and a lifetime-buy period is in effect.
NRND: Not recommended for new designs. Device is in production to support existing customers, but TI does not recommend using this part in a new design.
PREVIEW: Device has been announced but is not in production. Samples may or may not be available.
OBSOLETE: TI has discontinued the production of the device.

(2) Eco Plan - The planned eco-friendly classification: Pb-Free (RoHS), Pb-Free (RoHS Exempt), or Green (RoHS & no Sb/Br) - please check http://www.ti.com/productcontent for the latest availability information and additional product content details.
TBD: The Pb-Free/Green conversion plan has not been defined.
Pb-Free (RoHS): TI's terms "Lead-Free" or "Pb-Free" mean semiconductor products that are compatible with the current RoHS requirements for all 6 substances, including the requirement that lead not exceed 0.1% by weight in homogeneous materials. Where designed to be soldered at high temperatures, TI Pb-Free products are suitable for use in specified lead-free processes.
Pb-Free (RoHS Exempt): This component has a RoHS exemption for either 1) lead-based flip-chip solder bumps used between the die and package, or 2) lead-based die adhesive used between the die and leadframe. The component is otherwise considered Pb-Free (RoHS compatible) as defined above.
Green (RoHS & no Sb/Br): TI defines "Green" to mean Pb-Free (RoHS compatible), and free of Bromine (Br) and Antimony (Sb) based flame retardants (Br or Sb do not exceed 0.1% by weight in homogeneous material)

(3) MSL, Peak Temp. -- The Moisture Sensitivity Level rating according to the JEDEC industry standard classifications, and peak solder temperature.

(4) There may be additional marking, which relates to the logo, the lot trace code information, or the environmental category on the device.

(5) Multiple Device Markings will be inside parentheses. Only one Device Marking contained in parentheses and separated by a "~" will appear on a device. If a line is indented then it is a continuation of the previous line and the two combined represent the entire Device Marking for that device.

Important Information and Disclaimer: The information provided on this page represents TI's knowledge and belief as of the date that it is provided. TI bases its knowledge and belief on information provided by third parties, and makes no representation or warranty as to the accuracy of such information. Efforts are underway to better integrate information from third parties. TI has taken and continues to take reasonable steps to provide representative and accurate information but may not have conducted destructive testing or chemical analysis on incoming materials and chemicals. TI and TI suppliers consider certain information to be proprietary, and thus CAS numbers and other limited information may not be available for release.

In no event shall TI's liability arising out of such information exceed the total purchase price of the TI part(s) at issue in this document sold by TI to Customer on an annual basis.

TAPE AND REEL INFORMATION

REEL DIMENSIONS

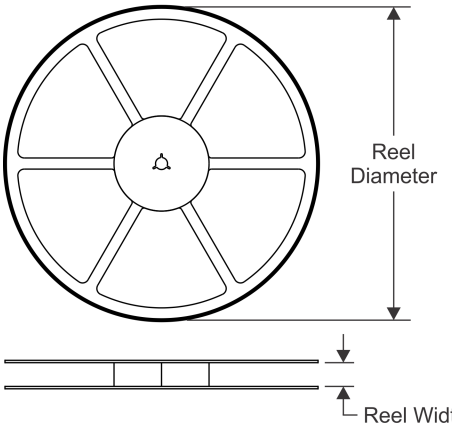

TAPE DIMENSIONS

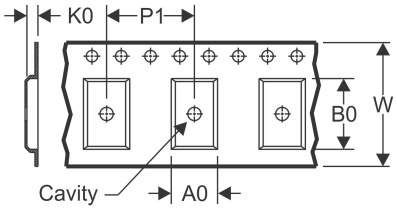

A0	Dimension designed to accommodate the component width
B0	Dimension designed to accommodate the component length
K0	Dimension designed to accommodate the component thickness
W	Overall width of the carrier tape
P1	Pitch between successive cavity centers

QUADRANT ASSIGNMENTS FOR PIN 1 ORIENTATION IN TAPE

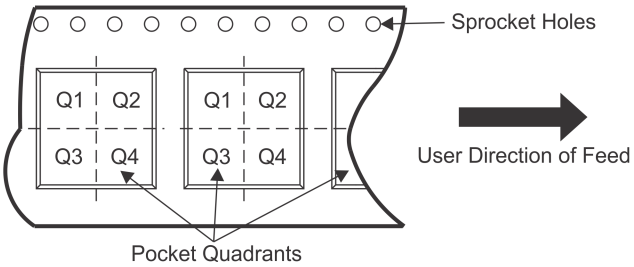

*All dimensions are nominal

Device	Package Type	Package Drawing	Pins	SPQ	Reel Diameter (mm)	Reel Width W1 (mm)	A0 (mm)	B0 (mm)	K0 (mm)	P1 (mm)	W (mm)	Pin1 Quadrant
LM27952SD/NOPB	WSON	NHK	14	1000	178.0	12.4	3.3	4.3	1.0	8.0	12.0	Q1
LM27952SDX/NOPB	WSON	NHK	14	4500	330.0	12.4	3.3	4.3	1.0	8.0	12.0	Q1

TAPE AND REEL BOX DIMENSIONS

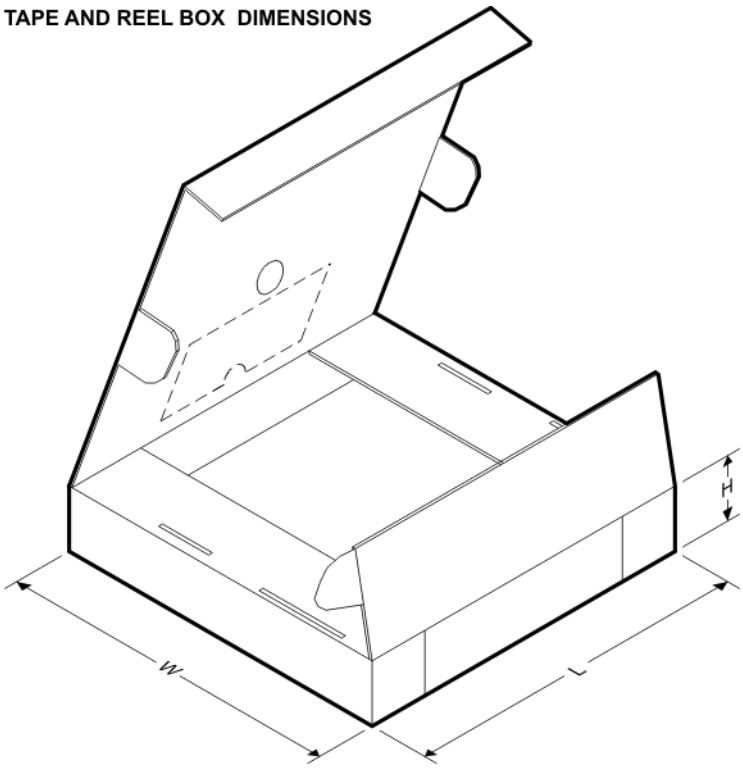

*All dimensions are nominal

Device	Package Type	Package Drawing	Pins	SPQ	Length (mm)	Width (mm)	Height (mm)
LM27952SD/NOPB	WSON	NHK	14	1000	210.0	185.0	35.0
LM27952SDX/NOPB	WSON	NHK	14	4500	367.0	367.0	35.0

NHK0014A

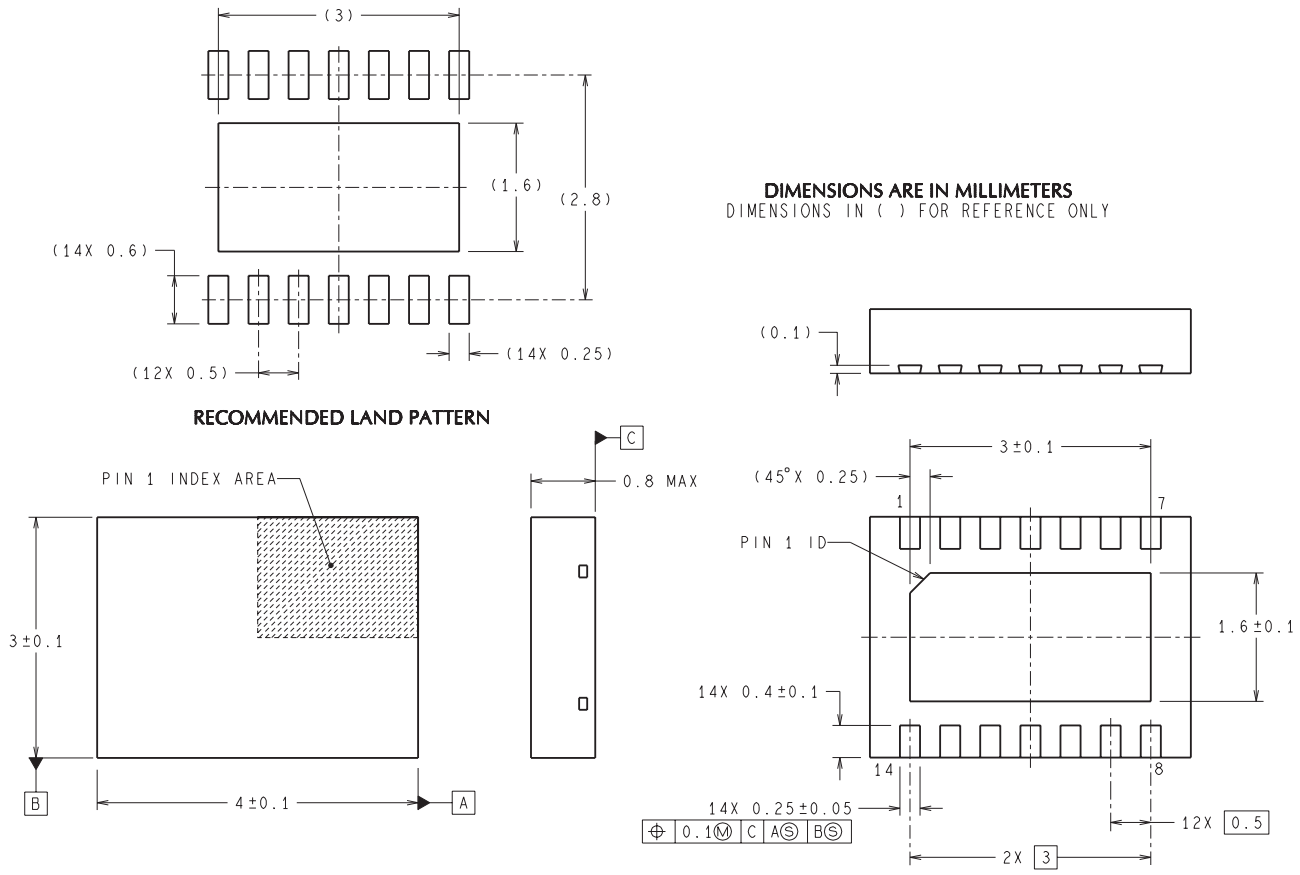

SDA14A (Rev A)

IMPORTANT NOTICE

Texas Instruments Incorporated and its subsidiaries (TI) reserve the right to make corrections, enhancements, improvements and other changes to its semiconductor products and services per JESD46, latest issue, and to discontinue any product or service per JESD48, latest issue. Buyers should obtain the latest relevant information before placing orders and should verify that such information is current and complete. All semiconductor products (also referred to herein as “components”) are sold subject to TI’s terms and conditions of sale supplied at the time of order acknowledgment.

TI warrants performance of its components to the specifications applicable at the time of sale, in accordance with the warranty in TI’s terms and conditions of sale of semiconductor products. Testing and other quality control techniques are used to the extent TI deems necessary to support this warranty. Except where mandated by applicable law, testing of all parameters of each component is not necessarily performed.

TI assumes no liability for applications assistance or the design of Buyers’ products. Buyers are responsible for their products and applications using TI components. To minimize the risks associated with Buyers’ products and applications, Buyers should provide adequate design and operating safeguards.

TI does not warrant or represent that any license, either express or implied, is granted under any patent right, copyright, mask work right, or other intellectual property right relating to any combination, machine, or process in which TI components or services are used. Information published by TI regarding third-party products or services does not constitute a license to use such products or services or a warranty or endorsement thereof. Use of such information may require a license from a third party under the patents or other intellectual property of the third party, or a license from TI under the patents or other intellectual property of TI.

Reproduction of significant portions of TI information in TI data books or data sheets is permissible only if reproduction is without alteration and is accompanied by all associated warranties, conditions, limitations, and notices. TI is not responsible or liable for such altered documentation. Information of third parties may be subject to additional restrictions.

Resale of TI components or services with statements different from or beyond the parameters stated by TI for that component or service voids all express and any implied warranties for the associated TI component or service and is an unfair and deceptive business practice. TI is not responsible or liable for any such statements.

Buyer acknowledges and agrees that it is solely responsible for compliance with all legal, regulatory and safety-related requirements concerning its products, and any use of TI components in its applications, notwithstanding any applications-related information or support that may be provided by TI. Buyer represents and agrees that it has all the necessary expertise to create and implement safeguards which anticipate dangerous consequences of failures, monitor failures and their consequences, lessen the likelihood of failures that might cause harm and take appropriate remedial actions. Buyer will fully indemnify TI and its representatives against any damages arising out of the use of any TI components in safety-critical applications.

In some cases, TI components may be promoted specifically to facilitate safety-related applications. With such components, TI’s goal is to help enable customers to design and create their own end-product solutions that meet applicable functional safety standards and requirements. Nonetheless, such components are subject to these terms.

No TI components are authorized for use in FDA Class III (or similar life-critical medical equipment) unless authorized officers of the parties have executed a special agreement specifically governing such use.

Only those TI components which TI has specifically designated as military grade or “enhanced plastic” are designed and intended for use in military/aerospace applications or environments. Buyer acknowledges and agrees that any military or aerospace use of TI components which have ***not*** been so designated is solely at the Buyer's risk, and that Buyer is solely responsible for compliance with all legal and regulatory requirements in connection with such use.

TI has specifically designated certain components as meeting ISO/TS16949 requirements, mainly for automotive use. In any case of use of non-designated products, TI will not be responsible for any failure to meet ISO/TS16949.

Products		**Applications**	
Audio	www.ti.com/audio	Automotive and Transportation	www.ti.com/automotive
Amplifiers	amplifier.ti.com	Communications and Telecom	www.ti.com/communications
Data Converters	dataconverter.ti.com	Computers and Peripherals	www.ti.com/computers
DLP® Products	www.dlp.com	Consumer Electronics	www.ti.com/consumer-apps
DSP	dsp.ti.com	Energy and Lighting	www.ti.com/energy
Clocks and Timers	www.ti.com/clocks	Industrial	www.ti.com/industrial
Interface	interface.ti.com	Medical	www.ti.com/medical
Logic	logic.ti.com	Security	www.ti.com/security
Power Mgmt	power.ti.com	Space, Avionics and Defense	www.ti.com/space-avionics-defense
Microcontrollers	microcontroller.ti.com	Video and Imaging	www.ti.com/video
RFID	www.ti-rfid.com		
OMAP Applications Processors	www.ti.com/omap	**TI E2E Community**	e2e.ti.com
Wireless Connectivity	www.ti.com/wirelessconnectivity		

Mailing Address: Texas Instruments, Post Office Box 655303, Dallas, Texas 75265
Copyright © 2013, Texas Instruments Incorporated